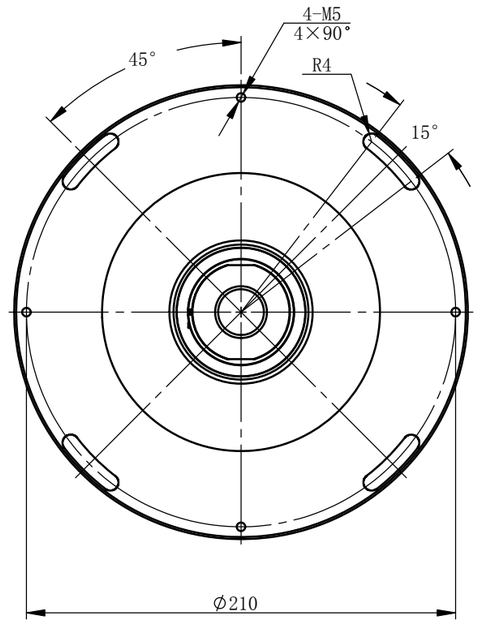

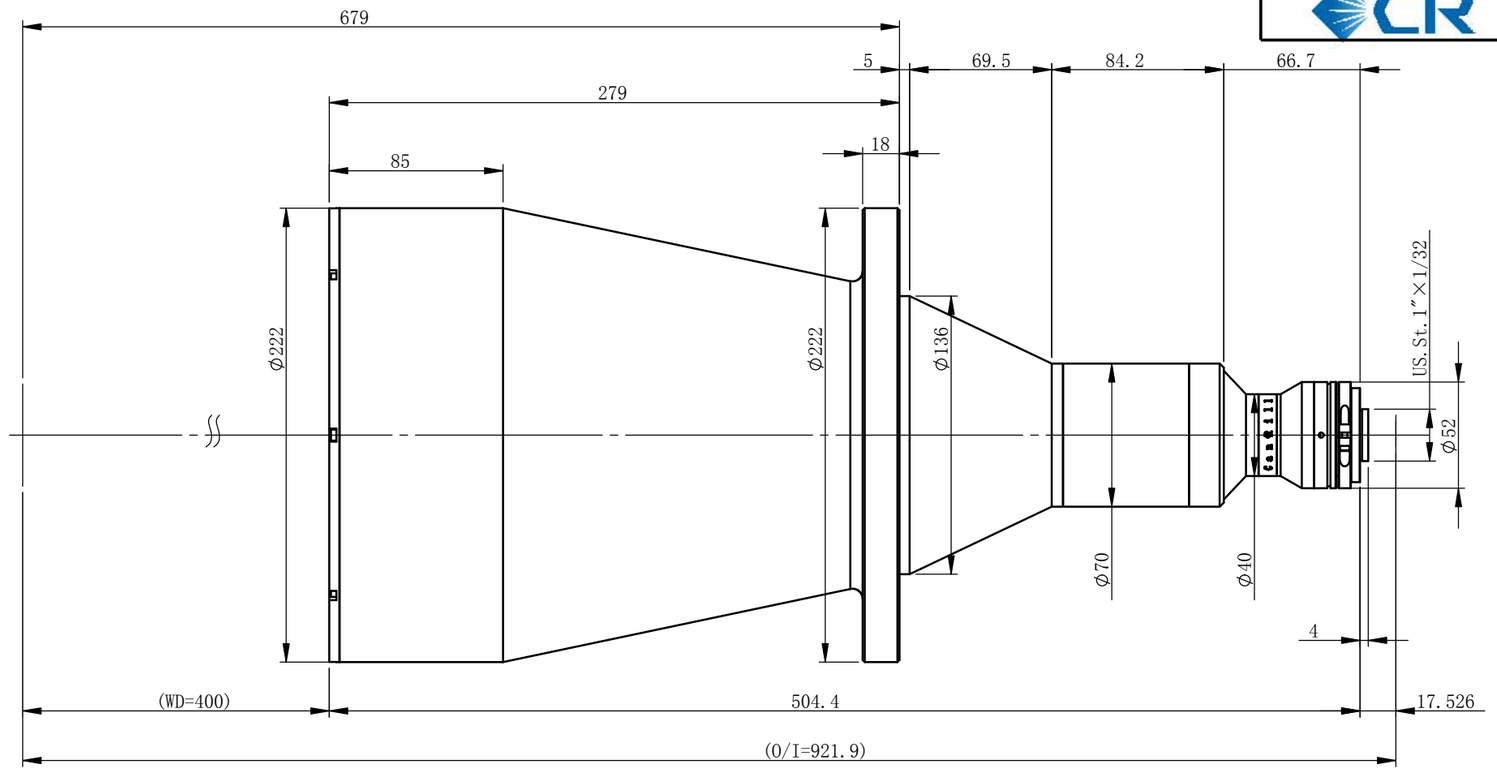

XF-PTL19516-C

Specification

Optical structure	Bi-Telecentric
Magnification	0.083
Object field of view	Φ195.2mm
Image field of view	Φ16.2mm
Working Distance	400mm±3%
Telecentricity	<0.04°(0.06°)
Depth of field	104.3mm
F#	F6.5
Resolution	51.66μm
MTF	>0.3@160lp/mm
Distortion	<0.044%(0.062%)
Detector type:	
1' 12.8×9.6	154.2×115.7mm
2/3' 8.45×7.07	101.8×85.2mm
1/1.8' 7.2×5.3	86.7×63.9mm
1/2' 6.4×4.8	77.1×57.8mm

XF-PTLAAABB-C/F/P/M-(L90E)

- The fourth generation lens of Canrill
- Object FOV
- Image FOV
- The camera mount (M & P mount need specify BFL)
- 90° Steering option

Undefined tolerance(mm)		degree	File Name		
X.X	±0.2	±30min	XF-PTL19516-C-外形尺寸-EN		
X.XX	±0.02		Drawing Name		
X.XXX	±0.005	Drawing Size: A3			
	Sign	Data/Ver.	Material	Ratio	Product Name
Design				1:5	
Modify1			Qty		Canrill OPTICS
Modify2			Total:	Page:	

All design and drawings are intellectual property of Canrill Optics, can not be copied without Canrill's authorization.